Overview

- The RT5015 is a high-efficiency, high-precision step-down (buck) high-power LED constant current drive control chip.
- RT5015 utilizes a fixed-frequency average current control method, providing excellent load and line regulation.
- By adjusting the external current sensing resistor, the RT5015 can precisely control the driving current of high-brightness LED lamps to achieve the desired constant brightness.
- It supports linear dimming via the CS pin and integrates a High/Low brightness function selectable through the HL pin.
- The chip incorporates a VDD voltage regulator and over-temperature protection circuitry to reduce external components and improve system reliability.
- RT5015 is available in a SOT23-6 package

Features

- **Wide Input Voltage Range**: 8V to 150V
- **High Efficiency**: Up to 93%
- **Dimming Support**: Linear dimming
- **Operating Modes**: Supports High/Low brightness modes
- **Operating Frequency**: 140kHz
- **CS Threshold Voltage**: 200mV
- **Under-Voltage Lockout (UVLO)**: 4.1V
- **Protection**: Intelligent over-temperature protection
- **Integration**: Built-in VDD voltage regulator

Applications

- LED Automotive Headlights
- Bicycle, Electric Vehicle, and Motorcycle Lights
- High-Power Flashlights
- LED Spotlights
- High-Power LED General Lighting
- LED Backlighting

Pin Configuration

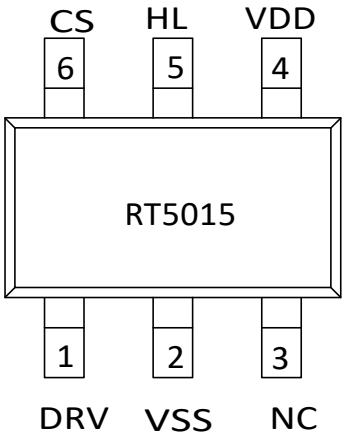

Definitions

Pin	Pin name	description
1	DRV	**Gate Drive**: External MOSFET gate drive output
2	VSS	Ground
3	NC	No Connection
4	VDD	**Power Supply**: Internal regulator output.
5	HL	**High/Low Brightness Set**: Floating or GND for High-bright; High for Low-bright (current halved).
6	CS	**Current Sense**: Current sampling and dimming input.

Absolute Maximum Ratings（Note 1）

Symbol	Description	Range	Unit
VDD	Maximum voltage	6	V
V_{MAX}	Voltage at the HL, DRV, and CS pins	-0.3~VDD+0.3	V
$P_{SOT23-6}$	Maximum power consumption for SOT23-6 package	0.3	W
T_A	Operating Temperature	-40~85	℃
T_{STG}	Storage Temperature	-40~120	℃
T_{SD}	Welding temperature（less than 30 seconds)	240	℃
V_{ESD}	ESD(HBM)	2000	V

Note 1: Stresses beyond those listed under "Absolute Maximum Ratings" may cause permanent damage to the device. Exposure to absolute-maximum-rated conditions for extended periods may affect device reliability.

Circuit Block Diagram

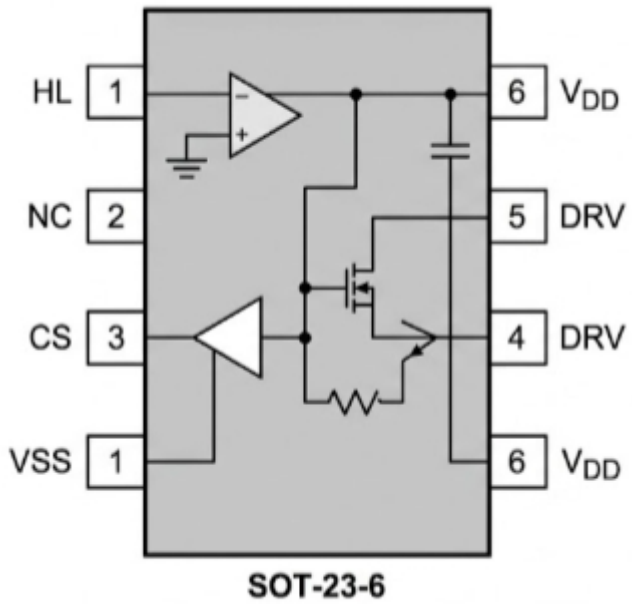

FIGURE 1: INTEGRATED CIRCUIT PINOUT

1. HL: HIGH/LOW BRIGHTNESS SETTING; FLOATING OR GND FOR HIGH-BRIGHTNESS; HIGH LEVEL FOR LOW-BRIGHTNESS (CURRENT HALVED)
2. NC: NO INTERNAL CONNECTION
3. CS: CURRENT SENSE PIN; LINEAR DIMMING INPUT
4. VSS: CHIP GROUND
5. DRV: DRIVER OUTPUT PIN; DRIVES EXTERNAL MOSFET GATE
6. V_{DD}: CHIP POWER SUPPLY PIN; INTERNAL REGULATOR OUTPUT

Electrical Characteristics

Unless otherwise specified，VDD=5.8V，T_A=25°C

Parameter	Symbol	Test Conditions	Min.	Typ.	Max.	unit
Supply Voltage						
VDD Clamp Voltage	V_{CL}	I_{VDD}<10mA		5.8		V
Under-Voltage Lockout (UVLO) Threshold	V_{DD_UVLO}	VDD Ramp-up		4.1		V
Under-Voltage Lockout (UVLO) Hysteresis	VDD_HYS			0.4		V

Supply Current						
Supply Current	I_{OP}			1.6		mA
Quiescent Current	I_{INQ}	No Load		500		uA
Average Current Sampling						
VCS Threshold	V_{CS_TH}		192	200	208	mV
HL Impedance						
HL Pin Pull-down Resistor	R_{HL}			80		kΩ
Switching Frequency						
OSC Frequency	F_{OSC}			140		kHz
Gate Drive						
DRV Rise Time	T_{RISE}	C_L = 500pF on DRV			50	ns
DRV Fall Time	T_{FALL}	C_L = 500pF on DRV			50	ns
Over-Temperature Protection (OTP)						
Thermal Regulation	OTP_TH			140		℃

Application Information

Operating Principle

The RT5015 utilizes a fixed-frequency average current control method. The chip features a typical internal switching frequency of 140kHz.

The circuit operates in two states: MOSFET ON and MOSFET OFF.

- **ON-State**: As shown in the typical application circuit (Figure 1), when the external MOSFET is turned on, the input voltage (V_{in}) charges the inductor (L_1) through the LED string, the inductor, the MOSFET, and the current sense resistor (R_{cs}).
- **Current Sampling**: During this phase, the inductor current increases linearly over time. The chip samples the voltage at the CS pin during the conduction phase and maintains this voltage level when the MOSFET is turned off.
- **Transition to OFF-State**: When the peak voltage drop across R_{cs} reaches the threshold set by the internal error amplifier, the control secondary circuit pulls the DRV output Low, thereby turning off the MOSFET.
- **OFF-State**: When the MOSFET is off, the inductor discharges its stored energy through a freewheeling loop consisting of the LED string, the freewheeling diode, and the inductor itself.
- **Cycle Completion**: At the end of each switching cycle, the internal OSC (Oscillator) clock signal triggers the MOSFET to turn back on, repeating the conduction and cut-off process.

High/Low Brightness Function

The RT5015 integrates a High/Low Brightness function. Users can select between these modes by configuring the HL pin.

Output Current Setting

The LED output current is determined by the current sense resistor R_{cs}:

$$I_{LED} = 0.2/R_{cs}$$

Inductor Selection

- To ensure the constant current characteristics of the system, the inductor current should operate in Continuous Conduction Mode (CCM).
- The required minimum inductance value is calculated as:

$$L_I > 4V_{LED} * (1 - V_{LED}/V_{IN}) / F_s * R_{CS}$$

Dimming

The RT5015 supports linear dimming via the CS pin.

HL Pin Setting

- **High-Brightness Mode**: When the HL pin is floating or connected to ground (GND), the LED output operates at the full current set by R_{cs}.
- **Low-Brightness Mode:** When the HL pin is connected to a high level, the LED output current is halved.

The HL pin features an integrated 80kΩ pull-down resistor.

MOSFET Selection

- **Voltage Rating**: The MOSFET's breakdown voltage should generally be more than 1.5 times the maximum output voltage.
- **Current Rating (I_{DS}):** The I_{DS} rating should be selected based on the LED driving current and the inductor's peak current. Generally, the maximum I_{DS} of the MOSFET should be at least 2 times the maximum peak inductor current
- **On-Resistance (R_{DSON}):** A lower R_{DSON} reduces power loss on the MOSFET and improves overall system efficiency.
- **Threshold Voltage (V_{GS}):** For high-voltage applications, choose a MOSFET with a threshold voltage within 2.5V.
- **Drive Voltage:** Since the chip's typical DRV drive voltage is 5.8V, ensure the MOSFET's on-resistance is sufficiently low when V_{GS} = 5.8V.

Supply Resistor Selection

- The RT5015 provides power to the chip's VDD pin through a supply resistor (R_{VDD}):

$$R_{VDD} = (V_{IN} - V_{DD}) / I_{VDD}$$

- In this calculation, V_{DD} is taken as 5.8V and the typical value for I_{VDD} is 2mA, where V_{IN} is the input voltage.
- If the input capacitance of the MOSFET is large, the chip's operating current will increase; accordingly, the value of the supply resistor (R_{VDD}) should be decreased.
- The internal Zener diode connected to the VDD pin has a maximum clamp current that must not exceed 10mA.
- Care should be taken to ensure that the value of R_{VDD} is not too small to prevent the current flowing into VDD from exceeding the allowable limit; otherwise, an external Zener diode must be connected for clamping.

Over-Temperature Protection

The system limits the input current when the chip temperature becomes too high.Typically, over-temperature regulation is activated when the internal chip temperature exceeds 140°C.

Chip Layout Considerations

The connections from the current sense resistor R_{CS} to the chip's CS pin and GND pin should be as thick and short as possible.This is to minimize the impact of parasitic resistance on the output current accuracy.

Typical Application Diagram

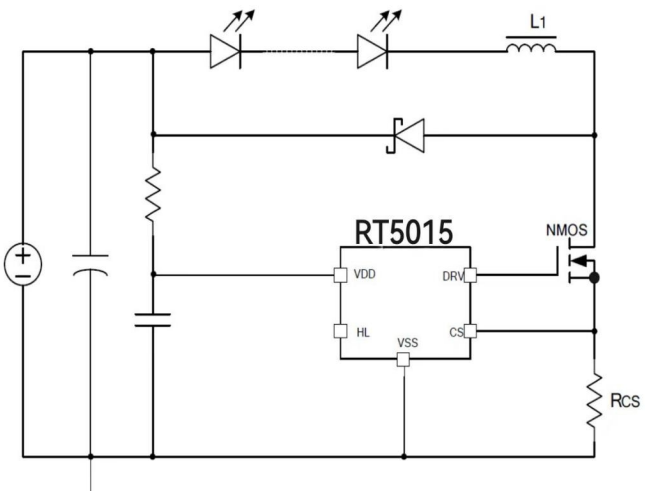

Package Information

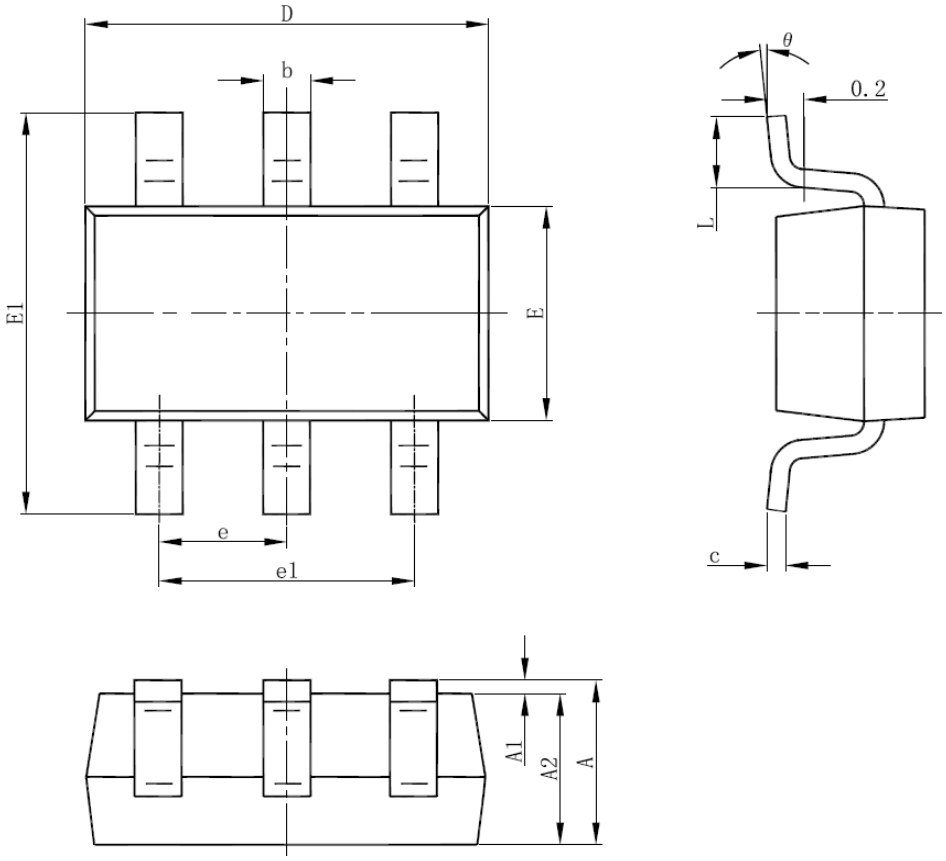

Tagging	Millimeter size		Inch size	
	minimum	maximum	minimum	maximum
A	1.050	1.250	0.041	0.049
A1	0.000	0.100	0.000	0.004
A2	1.050	1.150	0.041	0.045
b	0.300	0.500	0.012	0.020
c	0.100	0.200	0.004	0.008
D	2.820	3.020	0.111	0.119
E	1.500	1.700	0.059	0.067
E1	2.650	2.950	0.104	0.116
e	0.950(BSC)		0.037(BSC)	
e1	1.800	2.000	0.071	0.079
L	0.300	0.600	0.012	0.024
θ	0°	8°	0°	8°